Civil Engineering in Pre-lab Phase

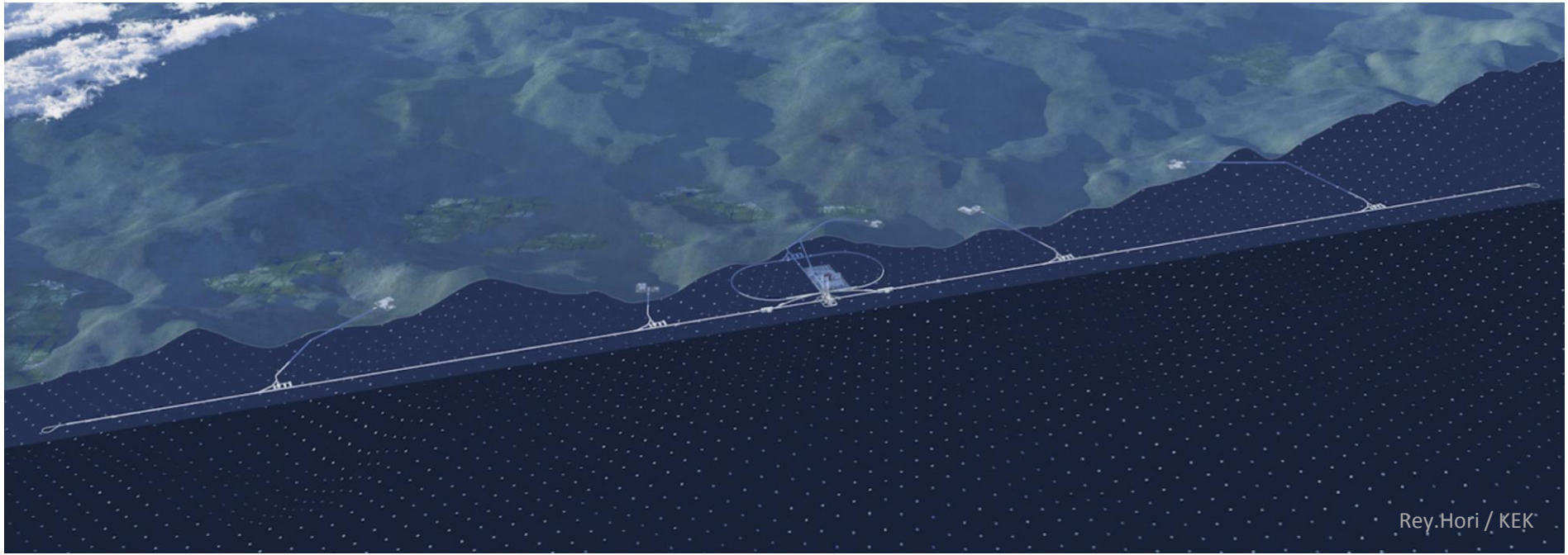

Civil Engineering in Pre-lab Phase

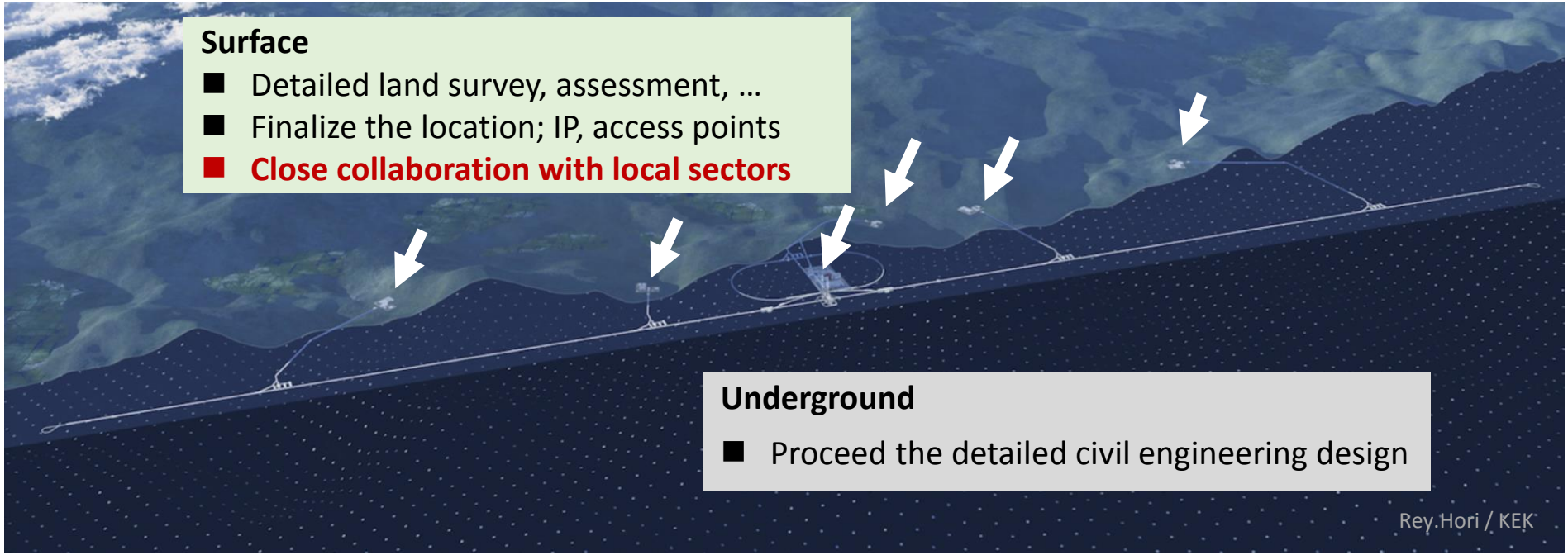

Surface

- Detailed land survey, assessment, …
- Finalize the location; IP, access points
- **Close collaboration with local sectors**

Underground

- Proceed the detailed civil engineering design

ILC Civil Engineering Activity in Japan

Premise:

- Civil works are the responsibility of the host country.
- Proceed the civil design using a model route in the Kitakami Mountains and examine the issues of civil works for the ILC.

- **KEK and universities in Japan,** with oversea collaboration
- **Experts from Industry**
  - WG of AAA for underground issues; experts from civil engineering companies
    Advanced Accelerator Association (AAA); An organization of industrial sector to aim to make a leap in science and technology through the development of cutting-edge accelerators jointly by industry and academia.
- **Enhanced activity in the Tohoku region**
  - **Upgrade the promotion body in Aug. 2020, "Tohoku ILC project development center"**
    - consists of Local governments(18), universities(3) and Iwate ILC promotion council.
    - **Examination of issues that the region should address** in terms of environmental improvement and research facility construction around the ILC candidate site
    - Natural environment, Social and Economic impacts of ILC construction
    - System and town development for researchers and their families, ...

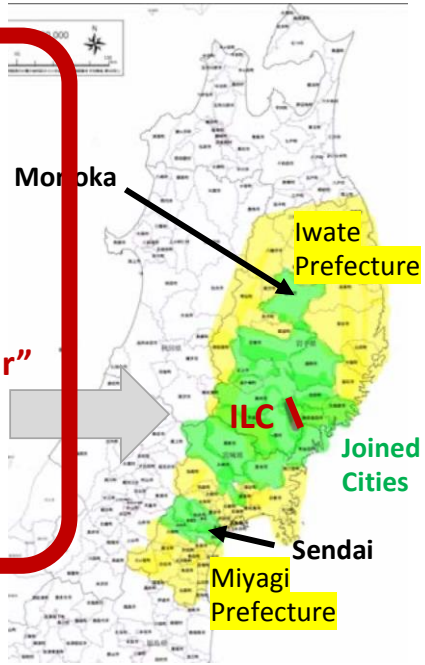

- **Validation of Civil Engineering Design at Kitakami Mountains**
  - 2019/7-**2020/3 by the Rock Mechanics Committee, the Japan Society of Civil Engineers**
  - It is the first validation by 3rd party based on the real candidate site and concluded that the "Civil Engineering Plan for ILC at Tohoku" is technically feasible.

Expected Schedule for Civil Engineering Design

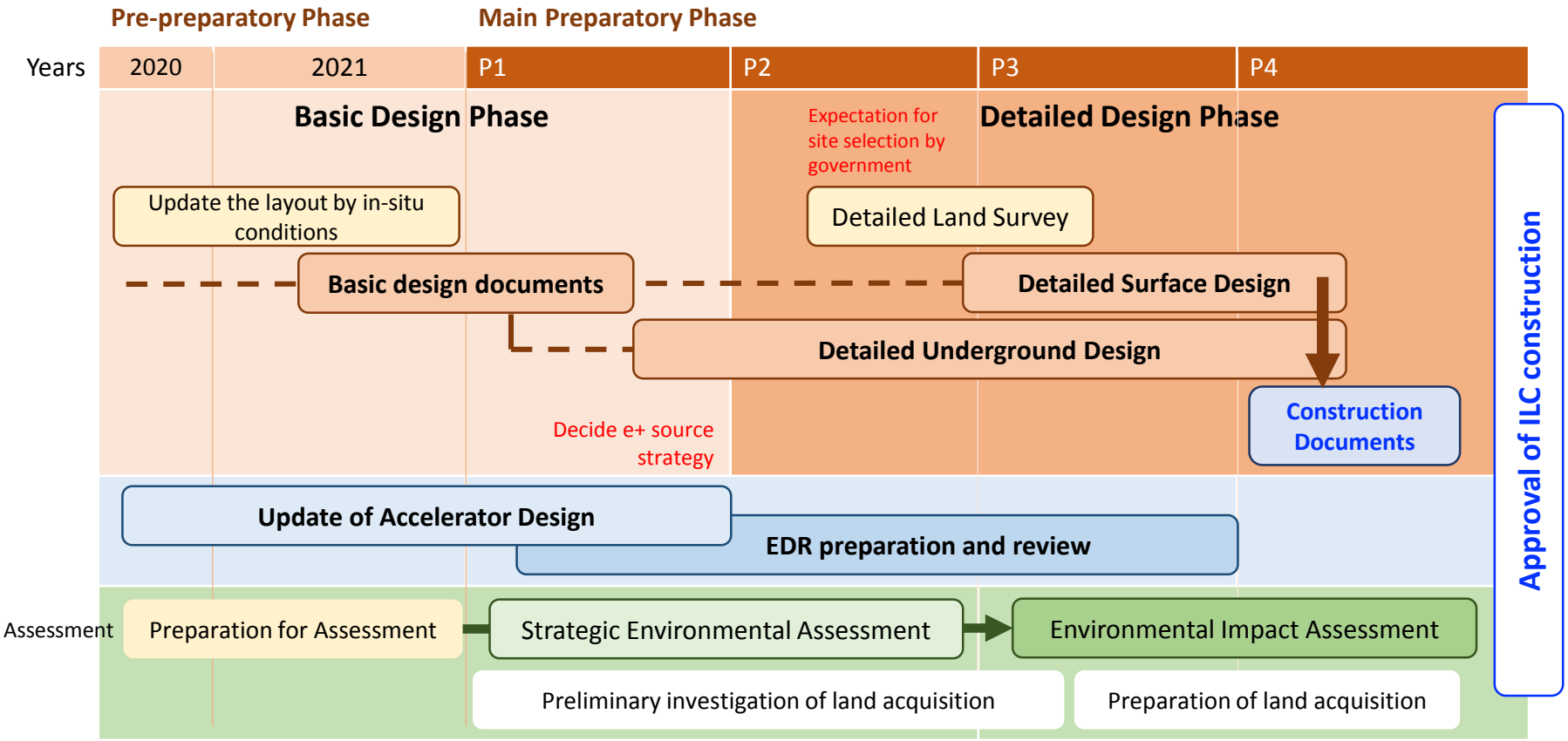

Some remaining issues for accelerators and detectors that affect civil engineering design

- Positron source
  - e-driven *(tunnel, target cavern)*
  - Undulator 8MW dump for 5+5Hz *(location)*
- Electron source
  - Gun station and laser room *(inadequate space in ML tunnel)*
- Main beam dump
  - Route for transporting dump and shields *(dump: diam.2m x 11m-long)*
- and …

- MDI
  - Push-pull platform
  - Packman shield
  - Gantry Crane
  - Liquid He distribution

MDI design will have a significant impact on civil engineering.

Civil Engineering Design for Positron Source

Since civil engineering (CE) work will start immediately after the preparation period, a lot of detailed design work is expected during the preparation period, so the CFS Group will proceed with the basic design of the CE for the positron source in advance.

- Have the CE design to **include the undulator scheme in any scenarios**.
  - **TDR based layout**
  - and have **Photon dump line** in the BDS tunnel
- **E-driven source** will be in **separated dedicated tunnel.**
  - **add on to the TDR based design**
  - From the CE view, sharing of BDS tunnel is not realistic.
  - e-driven study group is developing this design.
  - Access tunnel should be considered.

Design study for e-driven positron source

- Figure shows the length of the linac, taking into account the size and placement of devices.
- Positron injection into the DR uses RTL.
- Joint angle to the BDS tunnel will be optimized for local conditions.

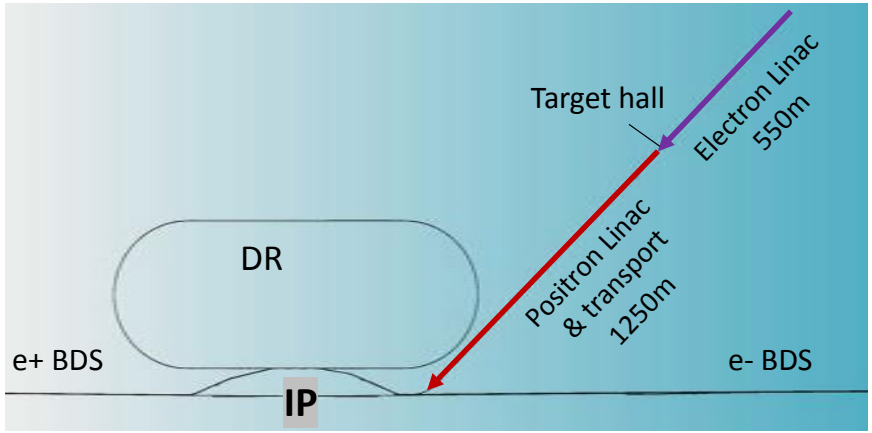

supplemental slides

Scale of the ILC-250GeV

Here, the access tunnel of the model route assuming the Kitakami Mountains is shown. The average length of access tunnels is about 1 km.

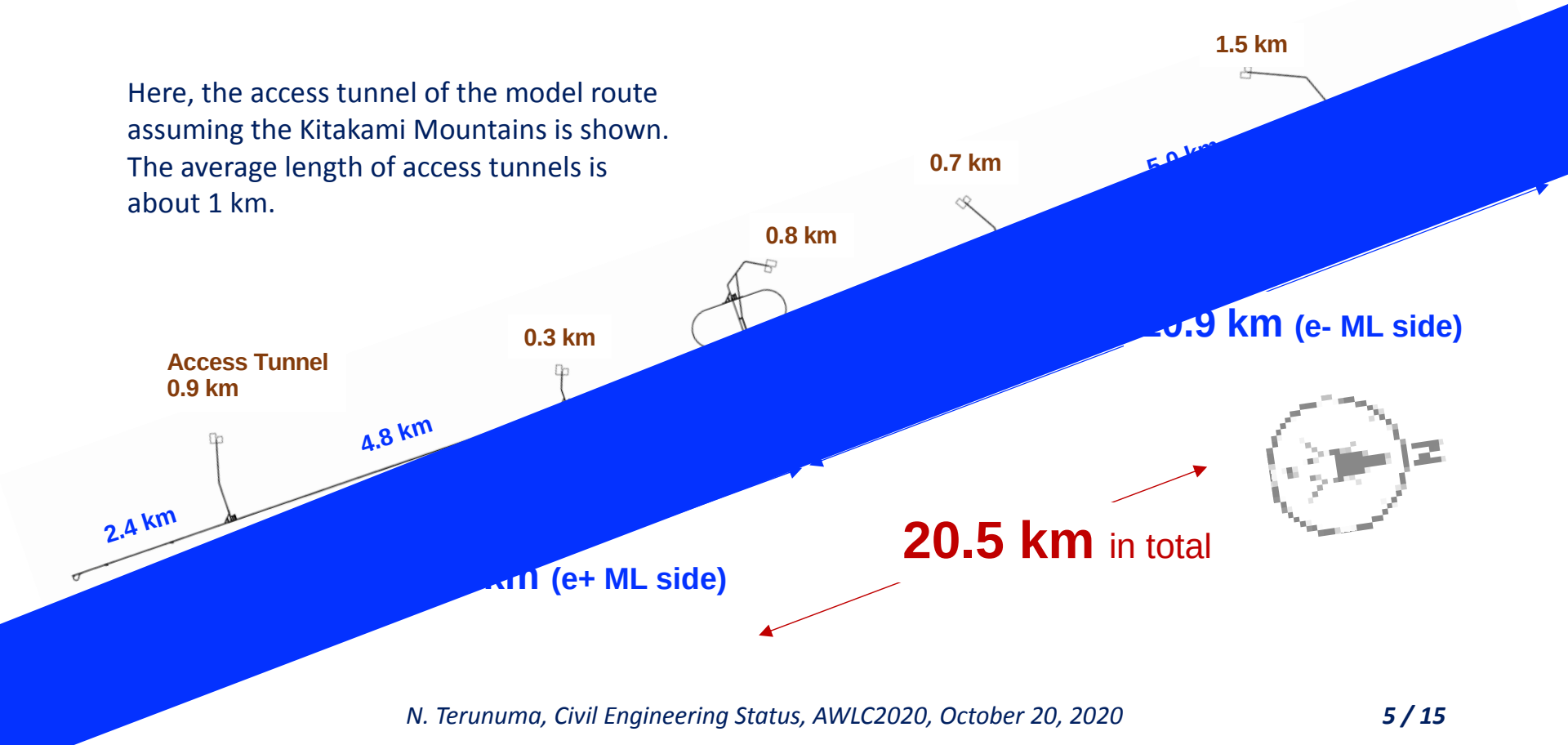

Geological Surveys for ILC: Kitakami Mountains

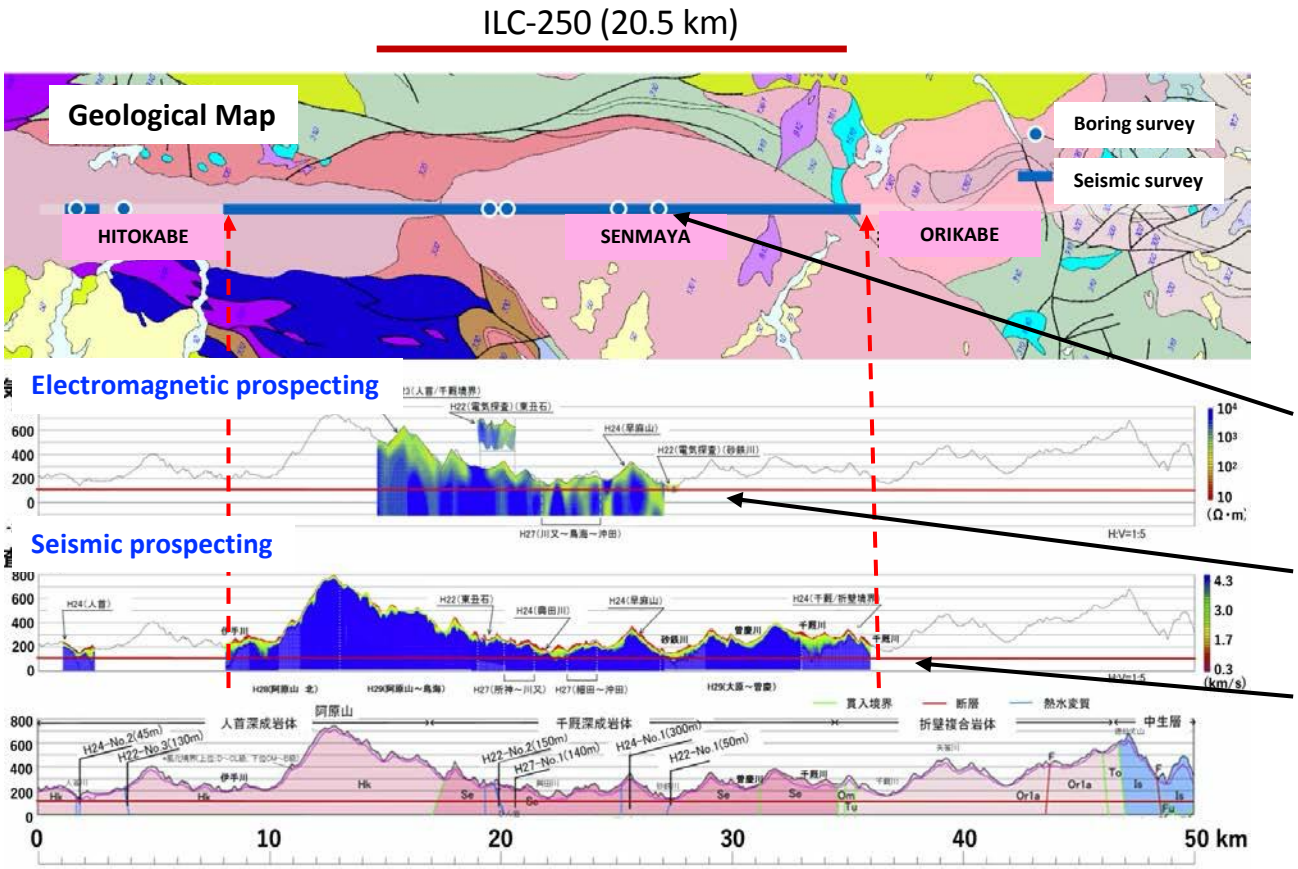

- Continuous **granite region**

  HITOKABE, **SENMAYA** and **ORIKABE** bedrock

- **Have capability to extend the ILC up to 50 km in future**

- **Boring geological survey**
  → Direct sampling down to the accelerator depth

- **Electromagnetic prospecting**
  → Cracks in the rock

- **Seismic prospecting**
  → Rock hardness

Civil Engineering related Schedule for ILC-250GeV

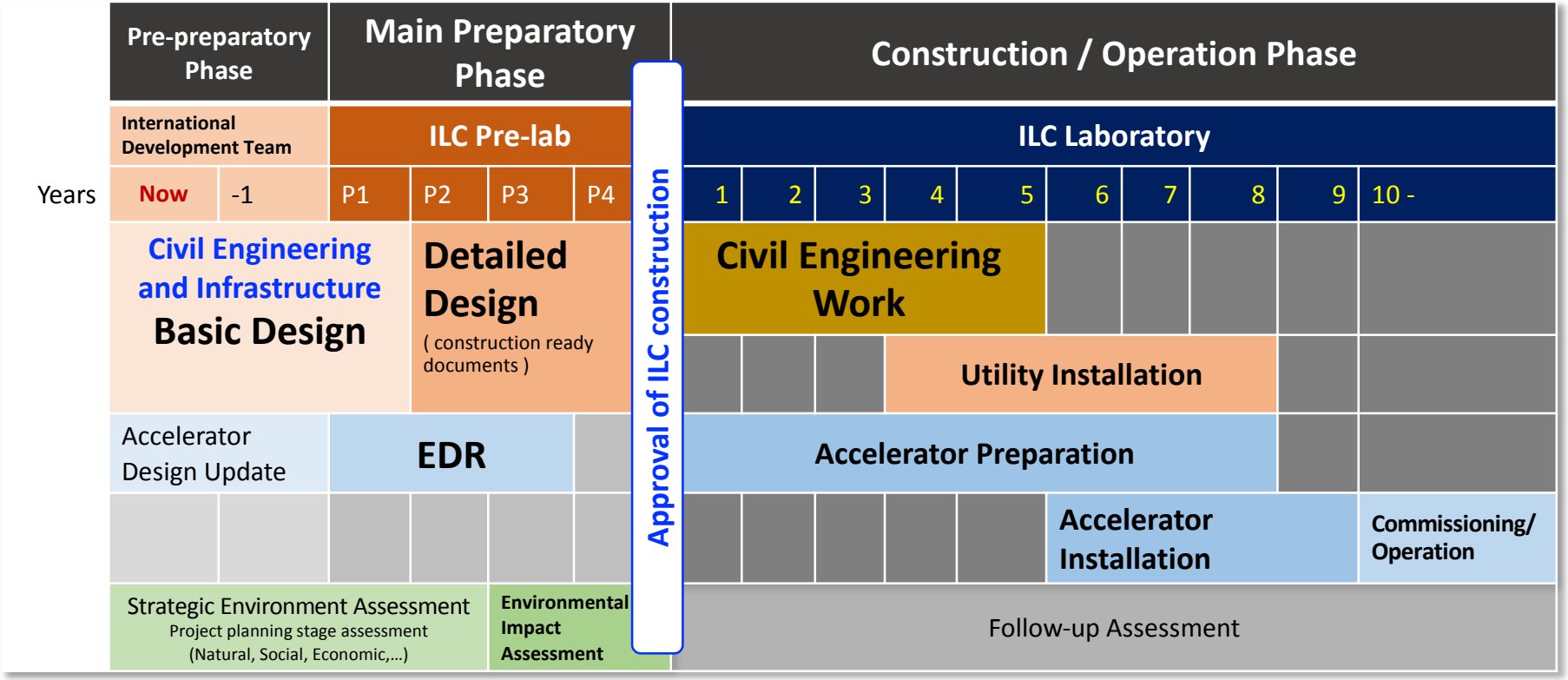

References; (1) TDR, (2) Recommendations on ILC Project Implementation, 2019.

Main Linac (ML) tunnel

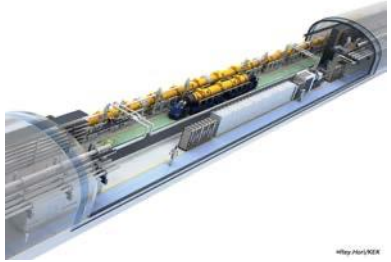

- 15 km in (e+e-) total
- follow the geoid in vertical
- **Kamaboko 9.5m X 5.5m**
- **1.5m central radiation shield**
- Further optimization will be done.

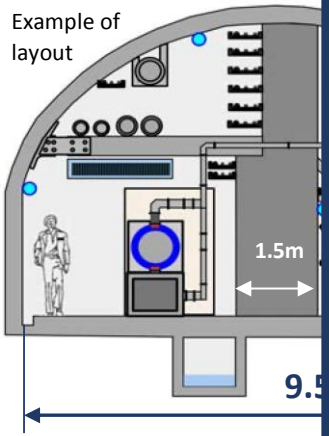

- **66 kV distribution cables**
- **Colling water pipes**
- Fan Coil Units
- Low power and signal cables
- **RF klystrons and modulators**
- **Electric Power Stations**

- **ML Cryomodules**
- **RTML**
- Low power and signal cables

Interaction Point (IP)

IP surface area

about 78,500 m²

Layout will be optimized.

AC Power distribution

154 kV Main Power Station at IP

→ 66 kV → tunnel → Access points

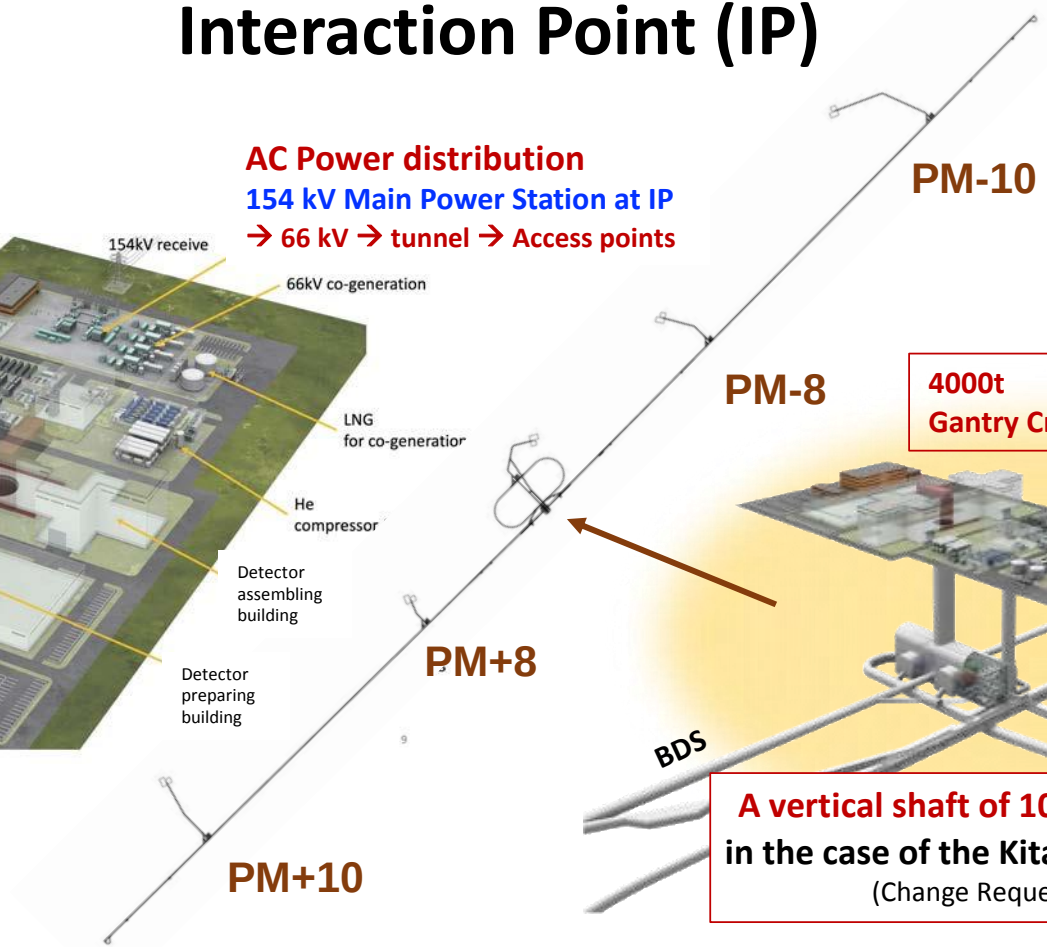

4000t
Gantry Crane

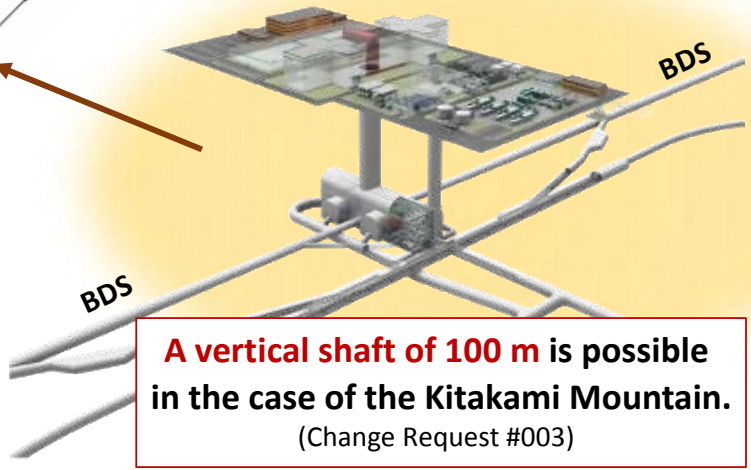

A vertical shaft of 100 m is possible in the case of the Kitakami Mountain.

(Change Request #003)

Detector Hall

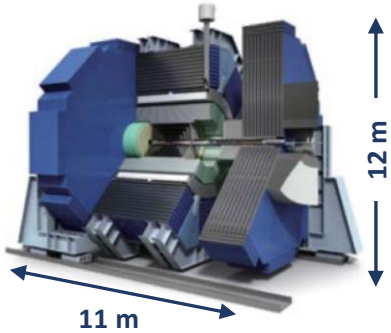

SiD, 8,000 t

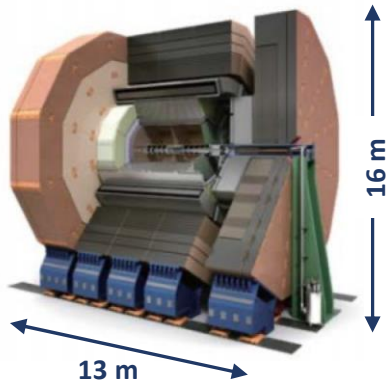

ILD, 15,000 t

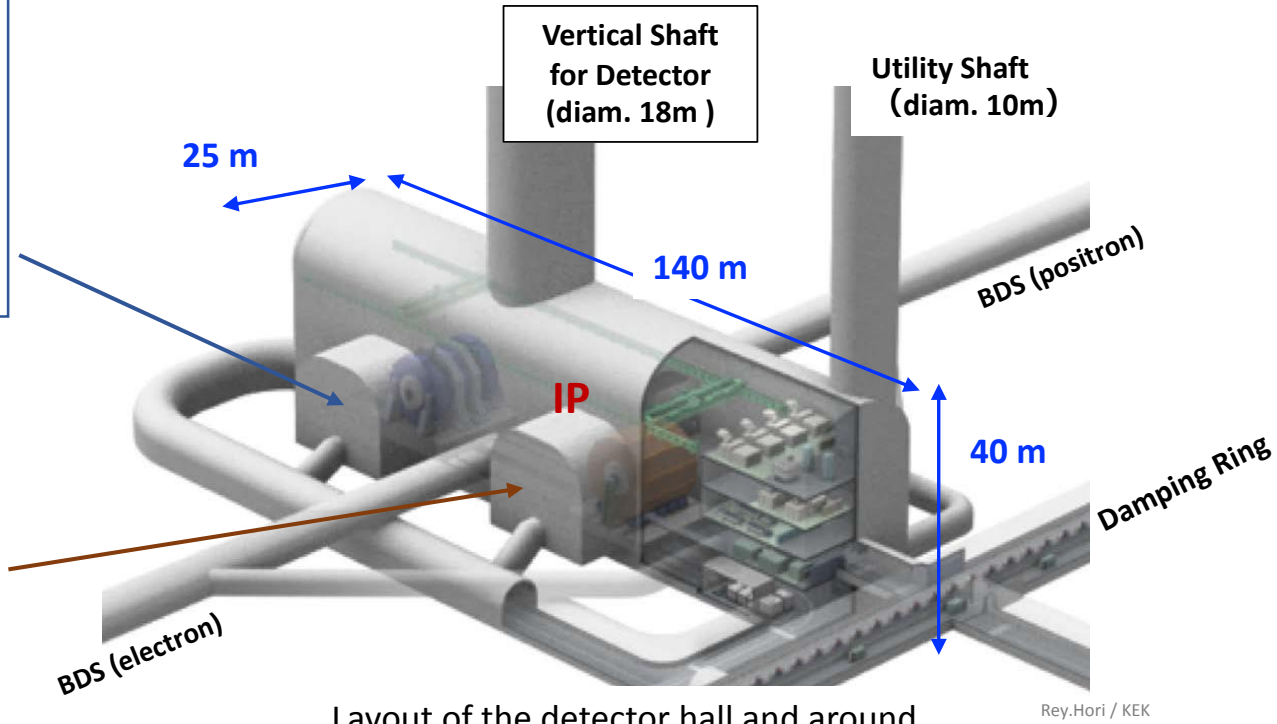

Layout of the detector hall and around will be optimized with detector groups.

Access Points x 5 (other than IP)

Surface Station

about 16,600 m²

The ground layout is optimized by the station.

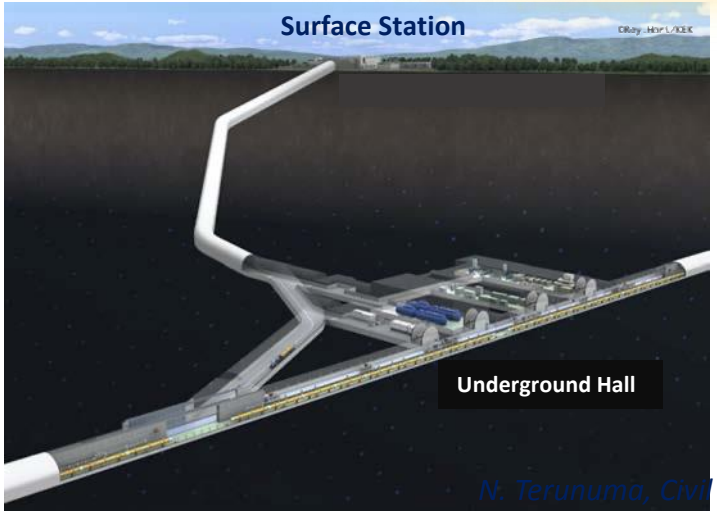

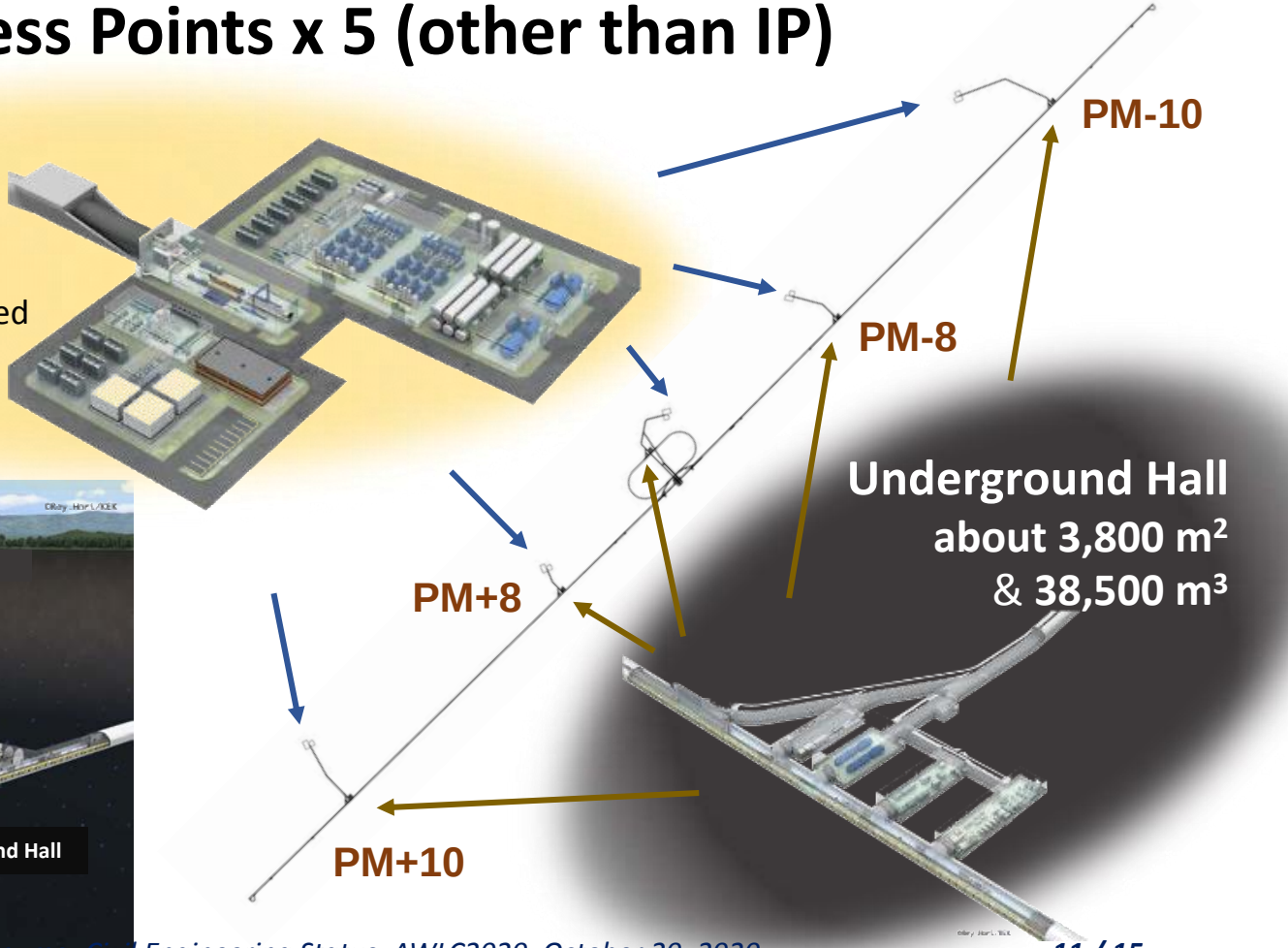

Cavern for Main Beam Dump

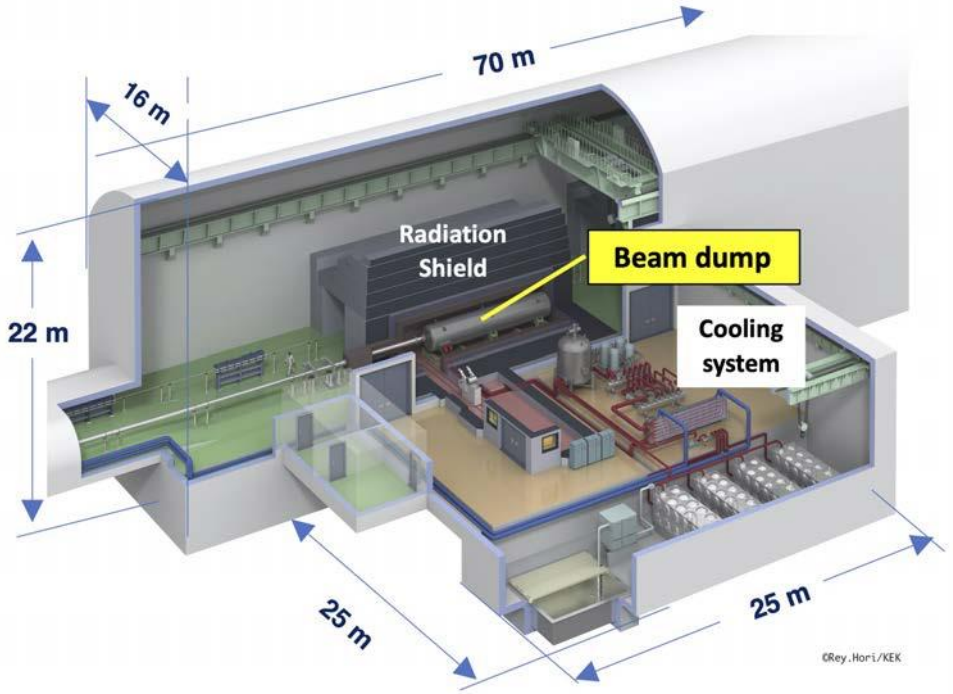

- **Three big caverns**
  - Two main beam dumps
  - e- dump for undulator, low energy collision (5 x 5 Hz)
- The main beam dump has been designed for **1 TeV collisions.**
  - **5 m thick concrete shield in all directions**
  - **17 MW power cooling (wider utility hall)**
  - **¼ volume of detector hall**
- **The civil engineering design is updating with experts from Industry (AAA).**