Positron Target Issues

2020.12.3

IDT-WG2 Sources Subgroup

K. Yokoya

Two Schemes

- Undulator Scheme (baseline) and
- e-Driven Scheme (backup)

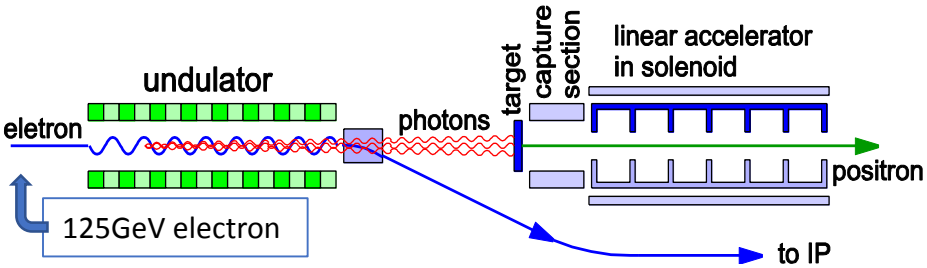

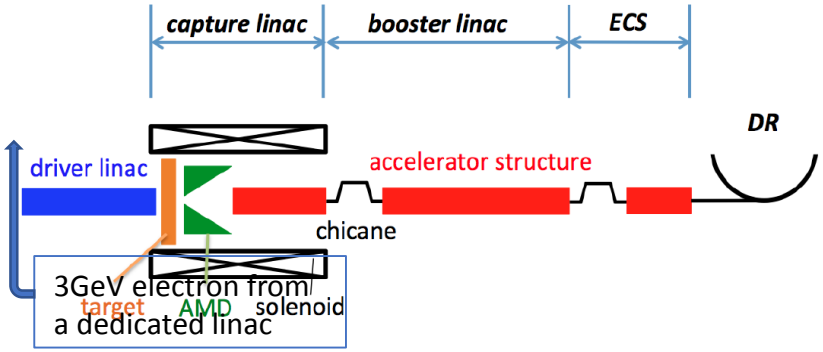

- Latest general report as of May 2018 http://edmsdirect.desy.de/item/D00000001165115

Undulator Scheme

- TDR (Design for Ecm=500 GeV)
  - Beam specification
    - ✓ Electron beam structure: 3.2 nC x 1312 bunches x 5Hz
    - ✓ Photons from 147m undulators (average ~10 MeV)
    - ✓ Positron yield > ~ 1.5 per incident electron (Ee=150GeV)
  - Target
    - ✓ Ti alloy (Ti6Al4V) wheel, diameter 1m, rotating at 2000 rpm (tangential speed 100m/s)
    - ✓ Thickness 0.4 X_0 (14mm)
    - ✓ In vacuum (~10^{-6} Pa)
    - ✓ Water cooling with vacuum seal by magnetic fluid
  - Optical Matching Device
    - ✓ Flux concentrator
    - ✓ <0.5T on target, >3T at 2cm, 0.5T at 14cm
    - ✓ Flat-top length ~1ms
  - Capture cavity
    - ✓ 1.3GHz Normal-Conducting, SW followed by TW up to 400MeV

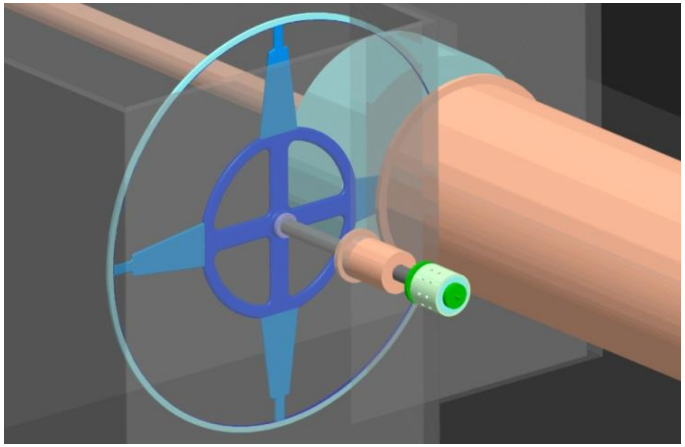

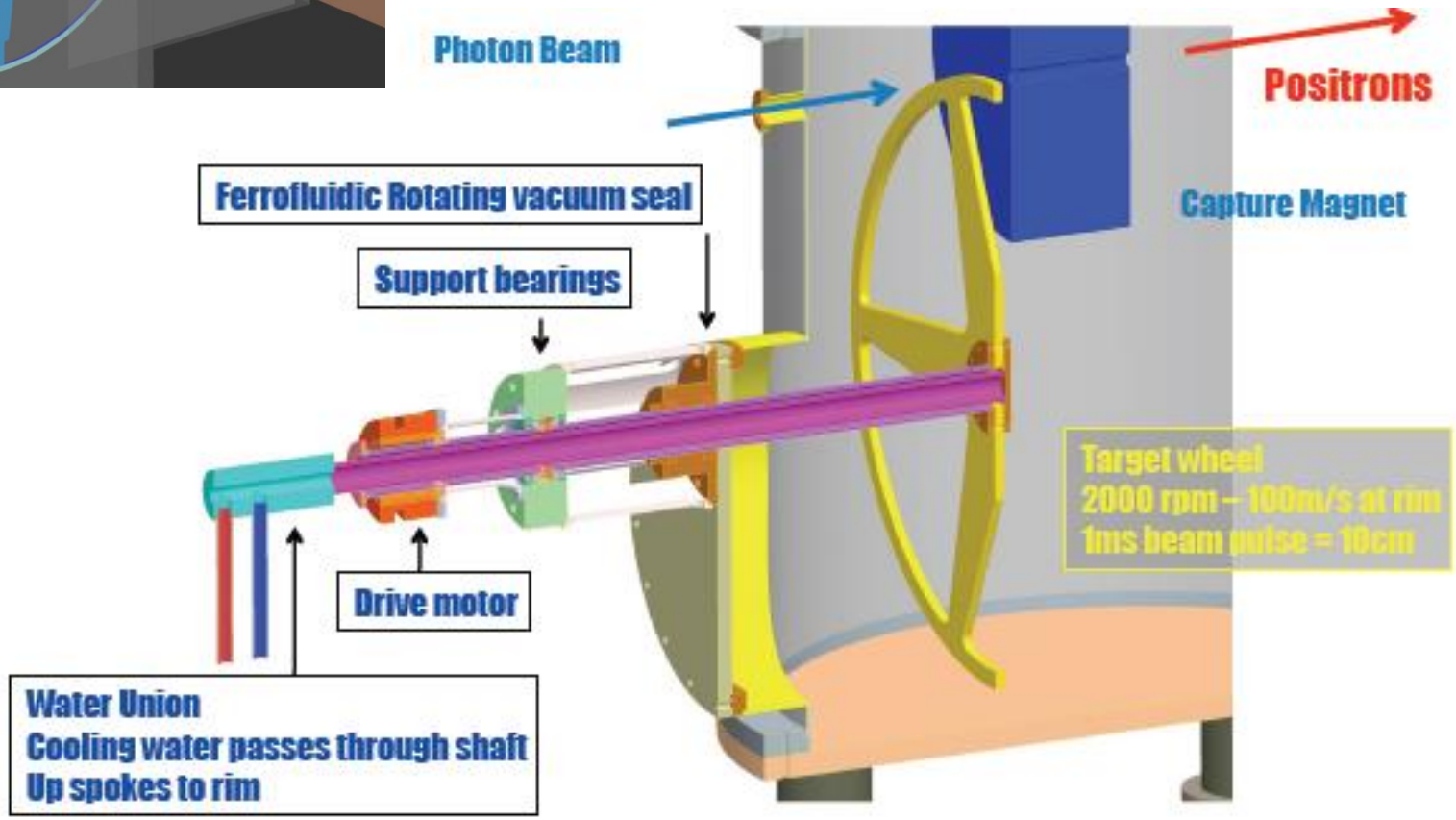
Photon Beam
Positrons
Ferrofluidic Rotating vacuum seal
Capture Magnet
Support bearings
Target wheel
2000 rpm – 100m/s at rim
1ms beam pulse = 10cm
Drive motor
Water Union
Cooling water passes through shaft
Up spokes to rim

Failure of the TDR Design

- Target
  - ➢ Vacuum leak through the magnetic fluid
    - ✓ Experiment at LLNL
  - ➢ R&D stopped soon due to US budget problem
    - ✓ → We do not know the real scientific answer
- Flux concentrator
  - ➢ A model designed at LLNL
  - ➢ Later, time-dependence of the field pointed out by computer simulation
  - ➢ Due to the skin depth effects at low frequency
- Other problems
  - ➢ Photon dump (up to 300kW, water cooling): The life of the Ti window tuned out to be only several days due to "dislocation-per-atom" problem
    - ✓ Not treated here (→ beam dump group)

LLNLでの試験の一例

FerroTec Seal #1 ran for 1 month (450 hours up)

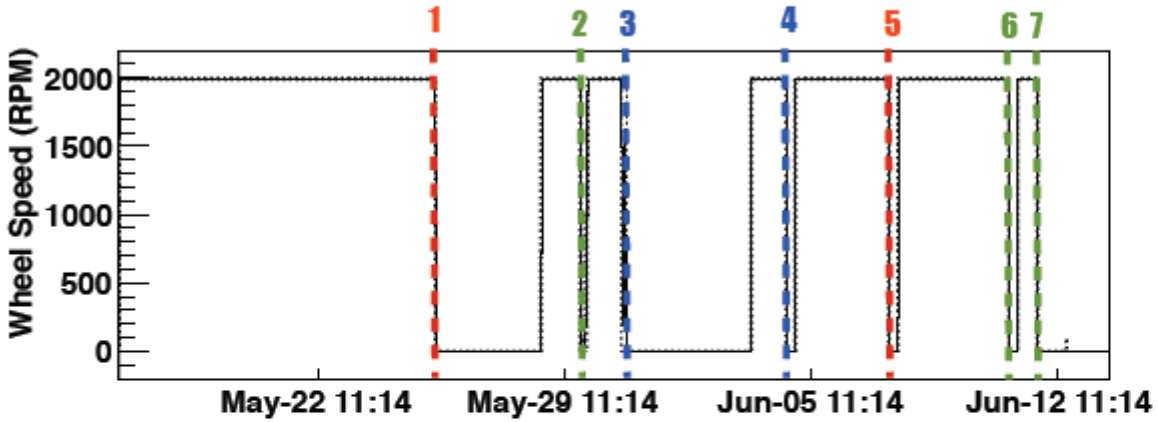

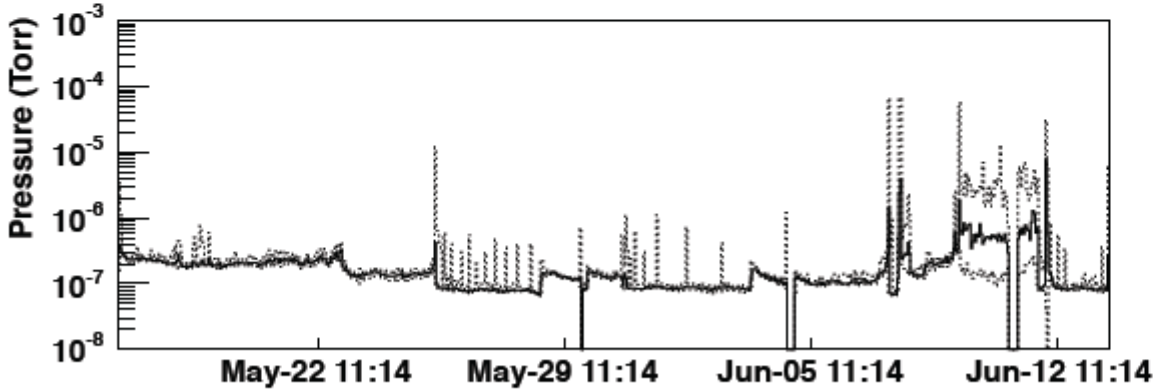

Pressure Trip

System Trip

Planned Down

1 - Pressure Spike

2 - DAQ software change

3 - Cooling water flow

4 - Vibration Limit

5 - Pressure Spike

6 - Wheel stopped for pressure test

7 - System down for rework

Lawrence Livermore National Laboratory

Option:UCRL#

Option:Additional Information

15

J. Gronberg, ECFA13

Flux Concentrator

- Positron capture device is flux concentrator in TDR
  - Peak field ~3.2T
  - Beam aperture r=6.5mm
  - Pulse length ~700μs (flattop)
- 2 problems
  - Field F(z) depends on time
    - Due to the frequency dependence of the skin depth ~ a few mm (~100Hz)
  - The shower from the target hits the tip of beam aperture with Ee=125GeV
- The first problem is quite serious. Almost give up flux concentrator

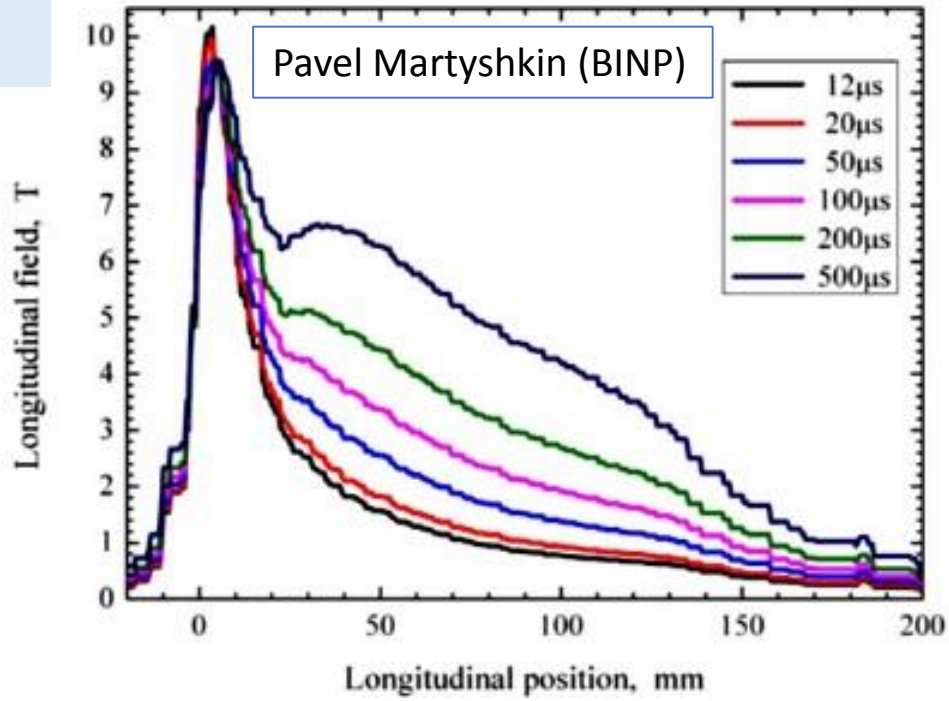

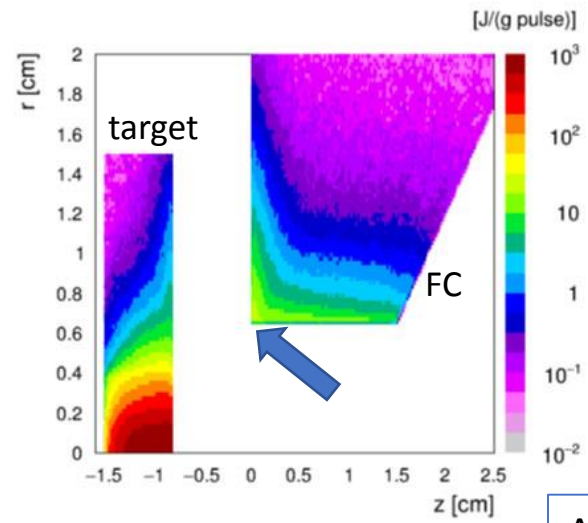

A. Ushakov

PEDD = 22.7 J/(g pulse)
(31.5 J/(g pulse) without collimator)

New Design of Target

- Parameter changes
  - Project scale also changed Ecm=500→250GeV
  - Thus, max electron energy 125GeV
  - To keep the positron yield, the undulators made longer, 147m → 231m
- Target design change
  - Target thickness 0.4 → 0.2 X_0 (7mm, energy deposit ~2kW)
  - Water cooling → radiation cooling
    - ✓ Magnetic bearing

Latest Parameters of Undulator Scheme

electron beam energy	GeV	126.5	125	150	175	250
undulator active length	m	231			147	
undulator K		0.85		0.8	0.66	0.45
photon yield per m undulator	$\gamma/(e^- m)$	1.70		1.52	1.07	0.52
photon yield	γ/e^-	392.7		223.9	157.3	76.1
photon energy (1st harmonic)	MeV	7.7	7.5	11.3	17.6	42.9
average photon energy	MeV	7.5	7.3	10.4	13.7	26.8
average photon beam power	kW	62.6	60.2	48.8	45.2	42.9
photon bunch energy	J	9.6	9.2	7.4	6.9	6.5
electron energy loss in undulator	GeV	3.0	2.9	2.3	2.2.	2.0
Ti6Al4V target thickness	mm	7	14.8		14.8	
energy deposition per photon in target	MeV	0.23	0.7	0.8	1.0	1.4
relative energy deposition	%	3.1	9.0	8.0	7.3	5.3
average power deposited in target	kW	1.94	5.4	3.9	3.3	2.3
energy deposition per bunch	J	0.3	0.83	0.60	0.50	0.35
space from middle of undulator to target	m	401	570		500	
photon beam spot size on target (σ)	mm	1.2	1.72	1.21	0.89	0.50
PEDD in target per bunch	J/g	0.65	0.40	0.49	0.66	1.19
PEDD in target per pulse (100 m/s)	J/g	61.0	43.7	41.0	42.4	45.8
polarization of captured positrons at DR	%	29.5	30.7	29.4	30.8	24.9

Radiation-Cooling Target

- Avoid cooling water inside
- Radiation cooling
  ~ σT^4
- Heat transfer
  - Ti → Cu : conduction
  - rotating Cu
    → sitting Cu : radiation
  - sitting Cu → water
- Rotation axis supported by magnetic bearing
  - In vacuum
  - No magnetic fluid

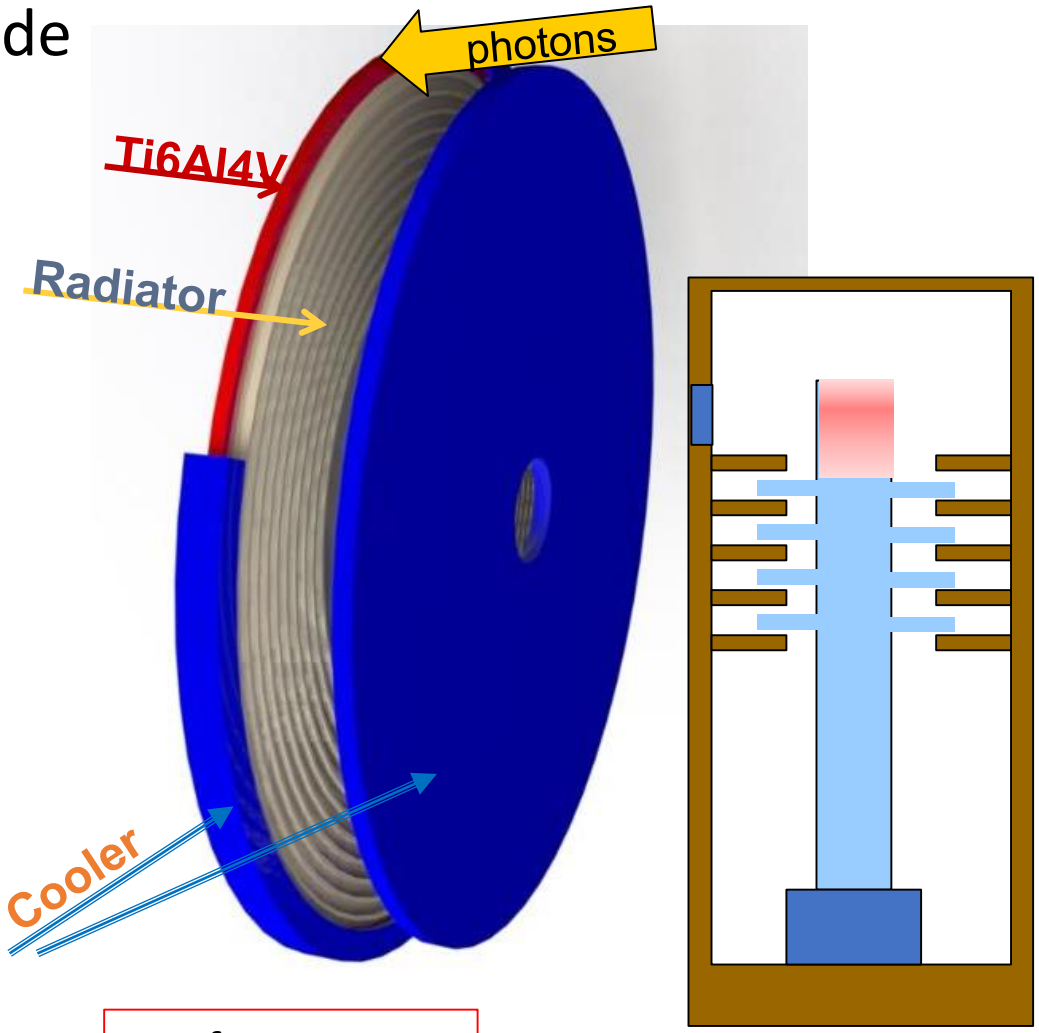

As of Sep.2018

Sketch: Felix Dietrich

Radiation Cooling Issues

- **Issues**
  - Heat transfer from Ti → rotating Cu → Sitting Cu
  - Heat property of the joint
  - Mechanical strength of joint (200 rpm)
  - Magnetic bearing
  - Eddy current if magnetic field at the target non-negligible
- **Must prove feasibility by ~ end of JFY2022 (Mar.2023)**
- Full prototype seems difficult
- What sort of partial test needed?
  - Sub-sector (no rotation) test possible? Useful?

QWT (Quarter Wave Transformer)

- To replace Flux concentrator
- Beam aperture r ~ 11mm
- Peak field 1.04T (Plus matching solenoid 0.5T)
- Can be DC (no skin depth problem)
- Possible problem is the positron yield

Used QWT was based on Wei Gai and Wanming Liu (ANL) model.
Dimensions were taken from M. Fukuda (KEK) AWLC2017 talk.

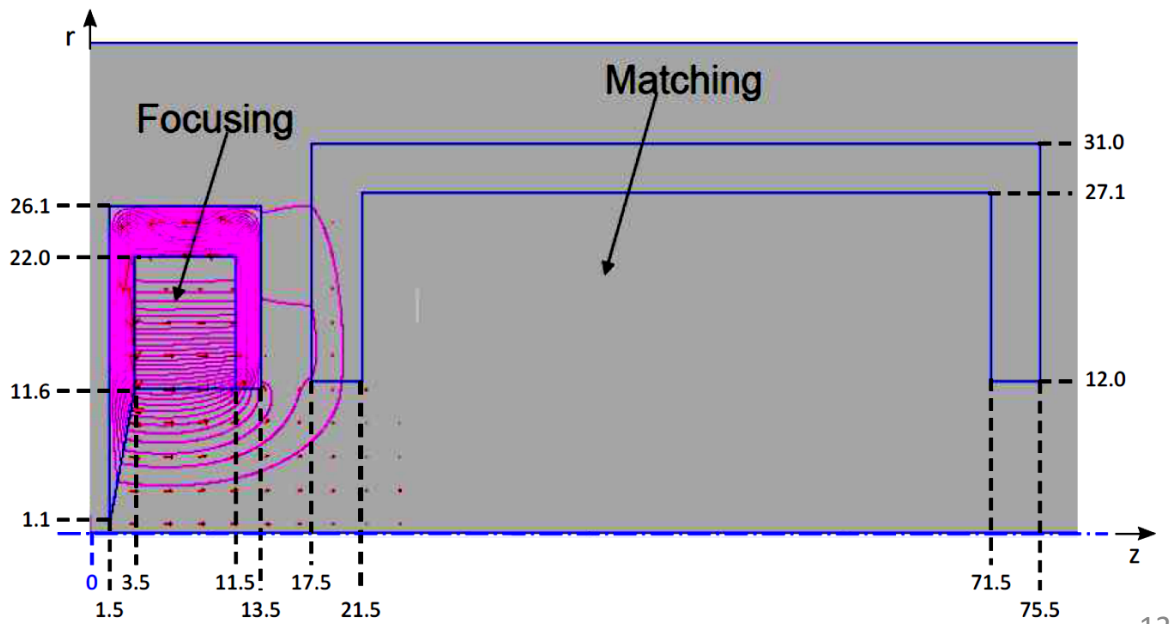

Positron Yield

- Positron yield η(e+/e-) = 1.5 desired
- The May.2018 report quoted a number η(e+/e-) = 1.3 with the QWT in the previous page, maybe marginally OK.
- But a more accurate calculation showed only 0.8
- This is the most urgent problem of the undulator scheme
- Field of QWT can be improved?
- A different focusing device?
  - **FC long pulse?**
  - Pulsed solenoid?
  - Plasma lens?
- All these must come with accurate yield calculation

e-Driven Scheme

- Target load can be relaxed by adopting a different pulse structure:
- Pattern on the right is repeated 20 times with ~3.3ms interval
- Total length 3.3ms x 20 = 66ms
- Time for damping in DR is 200-66=134ms

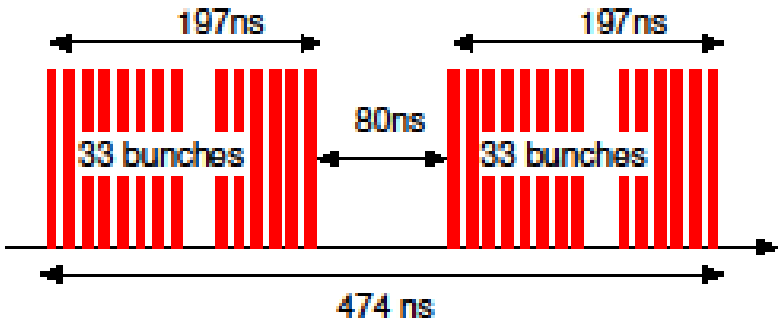

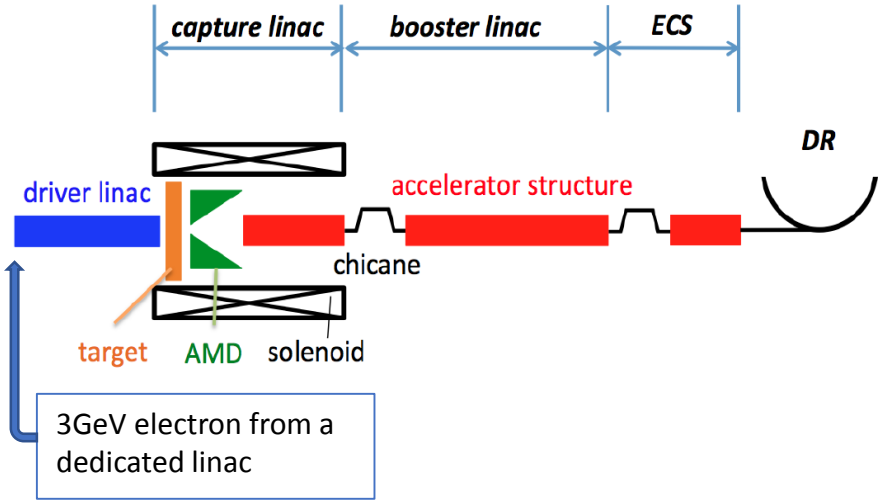

Latest published design
Nucl. Instr. Meth. A. 163134, 2019

https://doi.org/10.1016/j.nima.2019.163134

Target

- Water cooling with vacuum seal by magnetic fluid (same as the initial design for undulator scheme in this respect)
- W or W-Re. ~5X_0 (16mm)
- Rotating speed 5m/s at the rim (diameter 0.5m, 225 rpm)
- Energy deposit on the target ~20kW
- Many calculations have been done with the help by Rigaku
  - Heat
  - Stress
  - Cooling water
- Prototype tests also have been done
  - Radiation test →choice of magnetic fluid
  - Rotation test with the fluid (no water)
- Remaining Issues
  - Relatively in good shape
  - More accurate stress calculation
    - Need to know more about the material property
  - Experiment with cooling

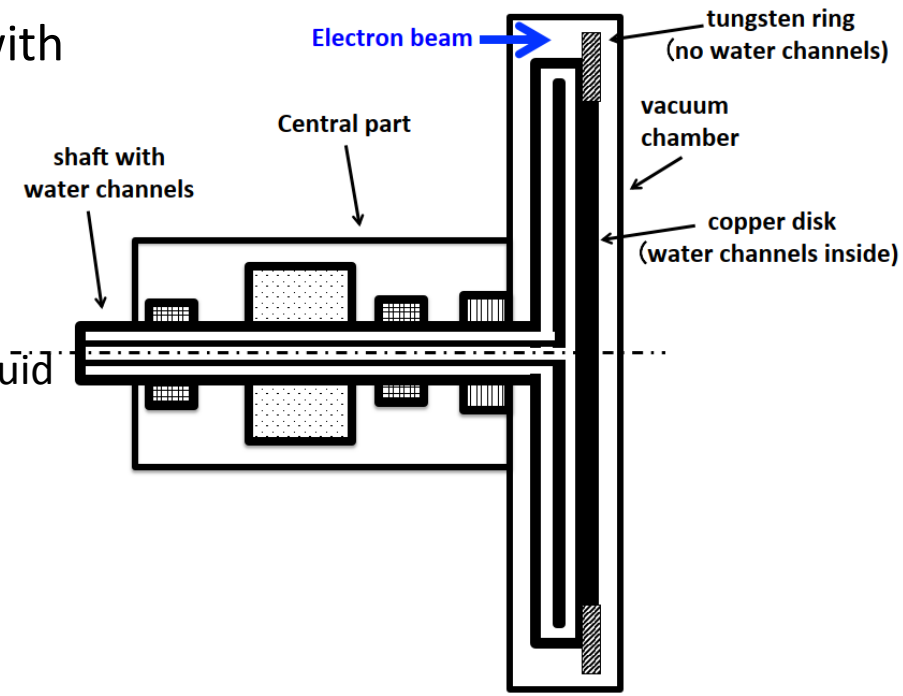

Flux Concentrator

- Peak field 5T
- Front aperture 16mm (diam.)
- Pulse length flat-top ~0.5μs
- Ohmic loss 14kW
- Design by Pavel Martyshkin (BINP) based on the BINP experience
- **Remaining issue**
  - Distance from target to FC must be settled (1-5 mm)
  - Cooling system
  - Is a prototype needed ?
    - ✓ If so, need a power source (expensive)
- Specification similar to that for CLIC

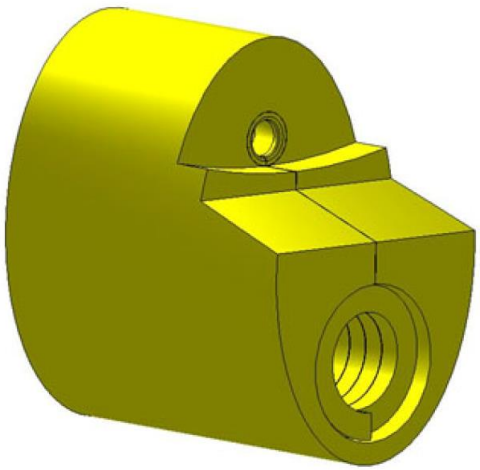

Capture Cavity

- Very high current in a pulse
  - e+ current in DR : 3.2nC / 6.16ns = 0.52 A
  - Margin x 1.5 → 0.78 A
  - Including electrons captured in the neiboring bucket x 2 → 1.56 A
  - May be more due to the loss from capture to DR entrance
- Special pulse structure
  - 80 ns gap in 474 ns pulse
- Very high beam-loading
- We are designing an APS (Alternating Periodic Structure) cavity

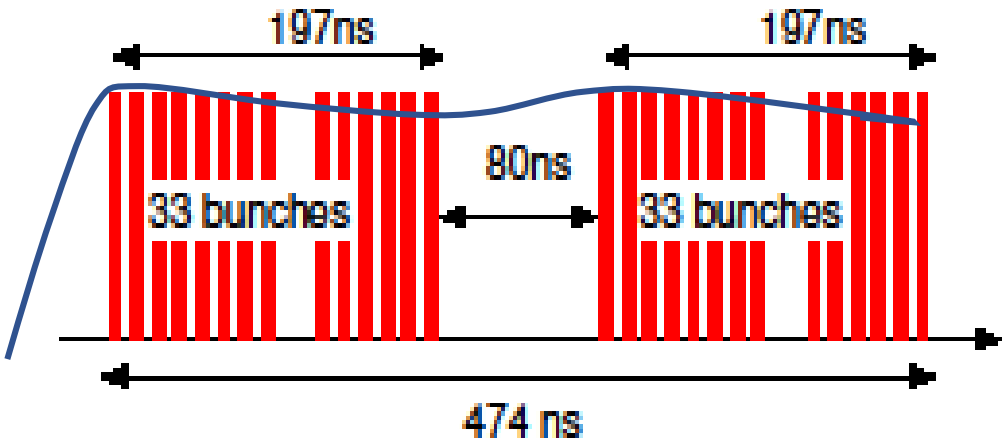

- Help by experience people desired